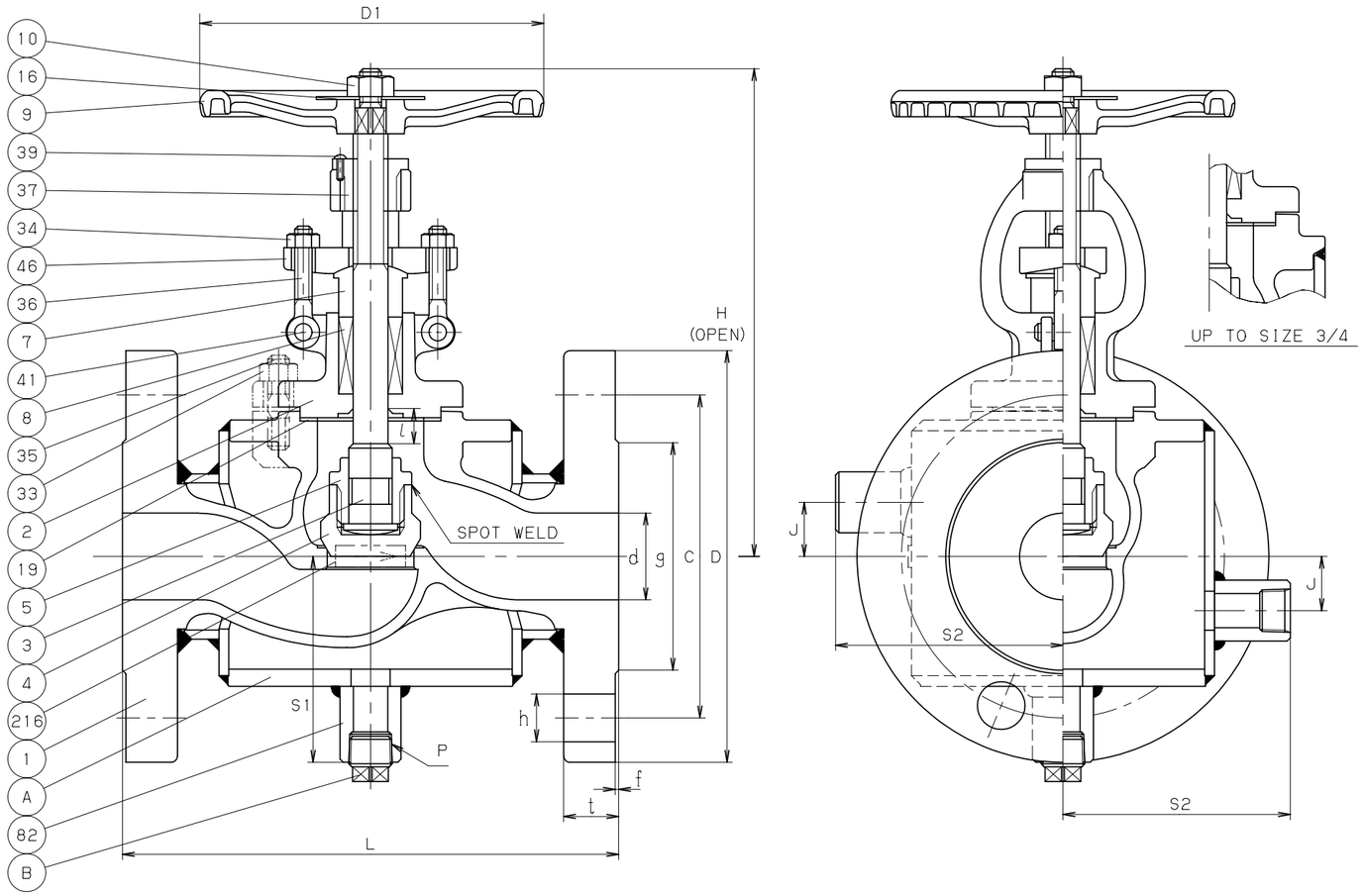

NO	NAME OF PARTS	QTY	MATERIALS	SPECIFICATIONS
				JIS SPEC.
1	BODY	1	STAINLESS STEEL	SCS14A
2	BONNET	1	STAINLESS STEEL	SCS14A
3	STEM	1	STAINLESS STEEL	SUS316
4	DISC	1	STAINLESS STEEL	SUS316
5	LOCK NUT	1	STAINLESS STEEL	SUS316
7	GLAND	1	STAINLESS STEEL	SUS316
8	GLAND PACKING	1S	(1)	
9	HAND WHEEL	1	DUCTILE IRON	FCD400
10	WHEEL NUT	1	CARBON STEEL	SS400
16	NAME PLATE	1	ALUMINUM	A1050P
19	GASKET	1	NON-ASBESTOS SHEET	
33	BONNET NUT	4	STAINLESS STEEL	SUS304 (8)
34	GLAND NUT	2	STAINLESS STEEL	SUS304 (8)
35	BONNET BOLT	4	STAINLESS STEEL	SUS304 (B8)
36	GLAND BOLT	2	STAINLESS STEEL	SUS304 (B8)
37	YOKE BUSH	1	DUCTILE NI-RESIST	
39	SET SCREW	1	CARBON STEEL	
41	GLAND BOLT PIN	2	STAINLESS STEEL	SUS403
46	GLAND FLANGE	1	STAINLESS STEEL	SCS13A
82	SOCKET	1S	CARBON STEEL	S25C
216	FLOW DIRECTION PLATE	1	STAINLESS STEEL	SUS304
A	JACKET	1S	CARBON STEEL	STPG370+SS400
B	PLUG	1	CARBON STEEL	S25C
			1S=1 SET	

STANDARD		
	FACE TO FACE OR END TO END	KITZ STANDARD
	END CONNECTION	ASME B16.5 CLASS 300
	WALL THICKNESS	ASME B16.34 CLASS 300
	PRESSURE TEST	API 598
	FIGURE	300UPAJM

DIMENSIONS. UNIT:mm

NOMINAL SIZE							END FLANGE											SOCKET		
							FLANGE		BOLT HOLE			BOLT								
in	mm	d	H	D1	L	l	SIZE	D	C	NO.	h	SIZE	g	t	f	S1	S2	P	NO.	J
1/2	15	15	186	100	165	9	1.1/2	156	114.5	4	22	3/4	73	20.7	1.6	75	80	Rc1/2	3	10
3/4	20	20	186	100	165	10	1.1/2	156	114.5	4	22	3/4	73	20.7	1.6	75	80	Rc1/2	3	10
1	25	25	187	100	203	12	2	165	127	8	19	5/8	92	22.3	1.6	85	86	Rc1/2	3	15
1.1/2	40	40	236	160	229	16	2.1/2	190	149	8	22	3/4	105	25.4	1.6	95	105	Rc1/2	3	25

NOTE (1) FLEXIBLE GRAPHITE + PTFE BRAIDED PACKING.

CLASS 300 CAST STAINLESS STEEL GLOBE VALVES

BOLTED BONNET, OUTSIDE SCREW & YOKE, JACKET TYPE, FLANGED ENDS.

DATE APPD	JAN.05.'09	DRAWING NO	△		
APPD BY	S. SANADA	962-B20013	△		
CHKD BY	Y. KONO		△		
DSGND BY	H. NISHIDATE		△		
DRAWD BY	M. HORIGOME	REV-04	MARK	DATE	BY

KITZ CORPORATION

KITZ

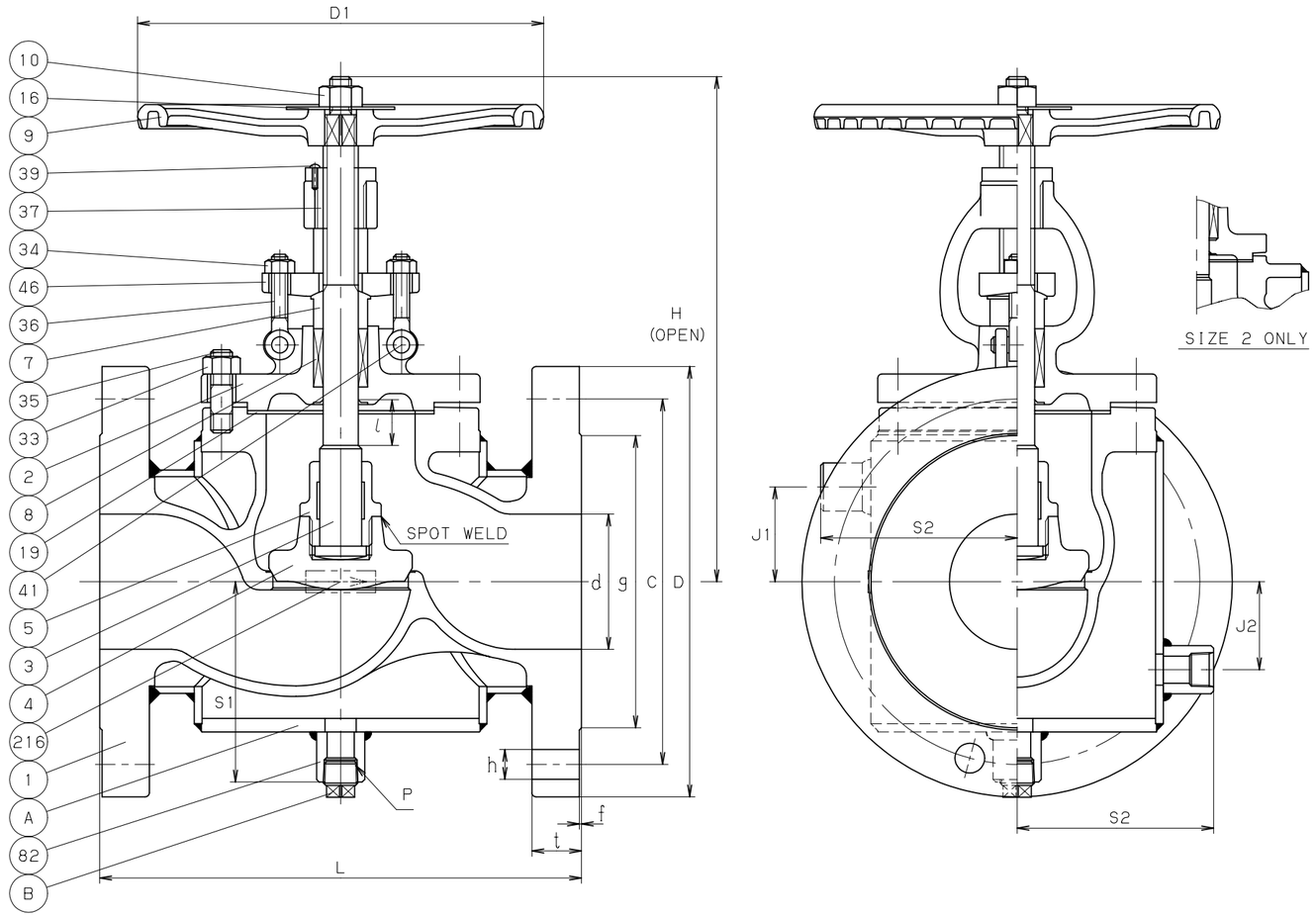

NO	NAME OF PARTS	QTY	MATERIALS	SPECIFICATIONS
				JIS SPEC.
1	BODY	1	STAINLESS STEEL	SCS14A
2	BONNET	1	STAINLESS STEEL	SCS14A
3	STEM	1	STAINLESS STEEL	SUS316
4	DISC	1	STAINLESS STEEL	SCS14A
5	LOCK NUT	1	STAINLESS STEEL	SCS14A
7	GLAND	1	STAINLESS STEEL	SUS316
8	GLAND PACKING	1S	(1)	
9	HAND WHEEL	1	DUCTILE IRON	FCD400
10	WHEEL NUT	1	CARBON STEEL	SS400
16	NAME PLATE	1	ALUMINUM	A1050P
19	GASKET	1	NON-ASBESTOS SHEET	
33	BONNET NUT	1S	STAINLESS STEEL	SUS304 (8)
34	GLAND NUT	2	STAINLESS STEEL	SUS304 (8)
35	BONNET BOLT	1S	STAINLESS STEEL	SUS304 (B8)
36	GLAND BOLT	2	STAINLESS STEEL	SUS304 (B8)
37	YOKE BUSH	1	DUCTILE NI-RESIST	
39	SET SCREW	1	CARBON STEEL	
41	GLAND BOLT PIN	2	STAINLESS STEEL	SUS403
46	GLAND FLANGE	1	STAINLESS STEEL	SCS13A
82	SOCKET	1S	CARBON STEEL	S25C
216	FLOW DIRECTION PLATE	1	STAINLESS STEEL	SUS304
A	JACKET	1S	CARBON STEEL	STPG370+SS400
B	PLUG	1	CARBON STEEL	S25C
			1S=1 SET	

DIMENSIONS. UNIT:mm

NOMINAL SIZE							END FLANGE											SOCKET			
							FLANGE		BOLT HOLE			BOLT									
in	mm	d	H	D1	L	l	SIZE	D	C	NO.	h	SIZE	g	t	f	S1	S2	P	NO.	J1	J2
2	50	50	289	180	267	21	3	210	168	8	22	3/4	127	28.6	1.6	107	118	Rc1/2	3	40	40
3	80	80	343	250	318	30	4	254	200	8	22	3/4	157	31.8	1.6	128	135	Rc1/2	3	55	50
4	100	100	398	300	356	35	6	318	270	12	22	3/4	216	36.6	1.6	151	148	Rc3/4	3	70	65

NOTE (1) FLEXIBLE GRAPHITE + PTFE BRAIDED PACKING.

STANDARD		
	FACE TO FACE OR END TO END	KITZ STANDARD
	END CONNECTION	ASME B16.5 CLASS 300
	WALL THICKNESS	ASME B16.34 CLASS 300
	PRESSURE TEST	API 598
FIGURE		300UPAJM

CLASS 300 CAST STAINLESS STEEL GLOBE VALVES

BOLTED BONNET, OUTSIDE SCREW & YOKE, JACKET TYPE, FLANGED ENDS.

DATE APPD	JAN.05.'09	DRAWING NO	△		
APPD BY	S. SANADA	962-B20014	△		
CHKD BY	Y. KONO		△		
DSGND BY	H. NISHIDATE		△		
DRAWD BY	M. HORIGOME	REV-04	MARK	DATE	BY

KITZ CORPORATION

KITZ