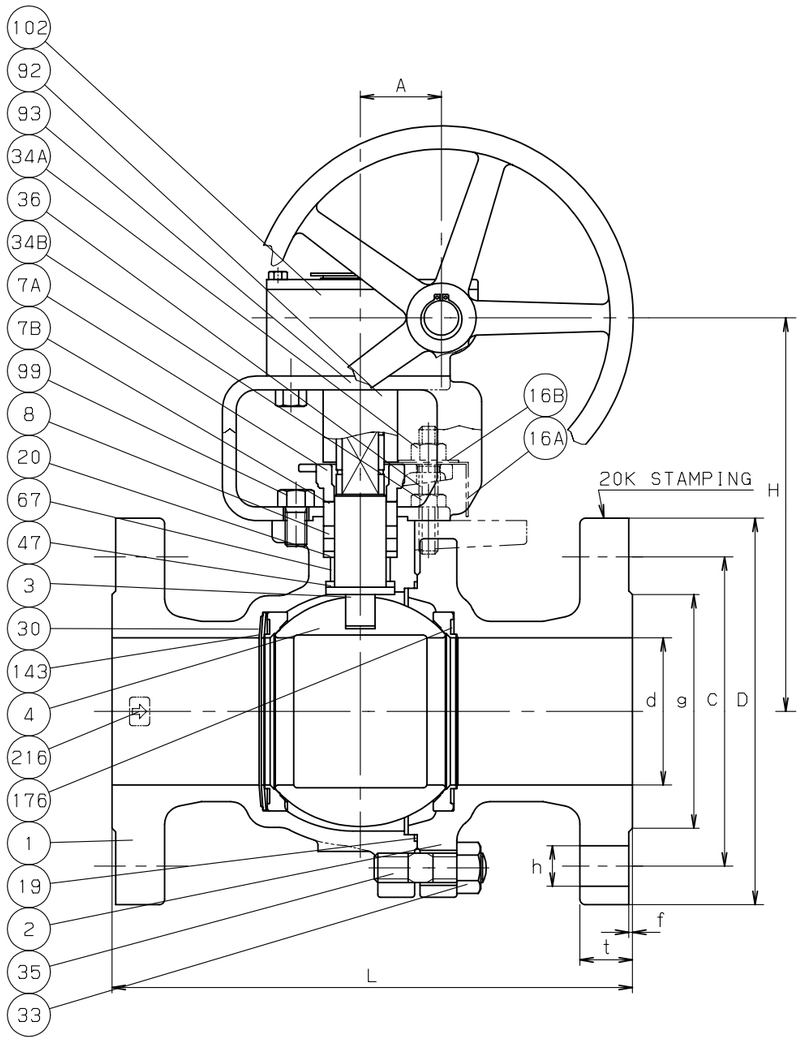

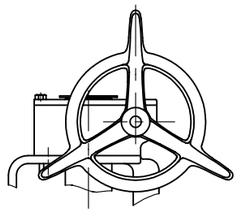

SIZE 200 ONLY

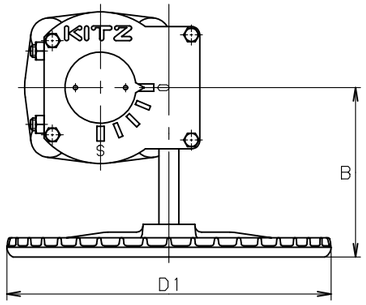

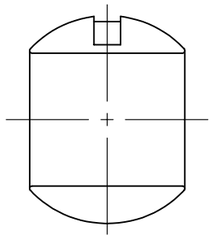

FOR SUS316

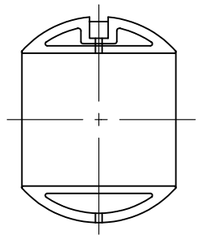

SIZE 200 ONLY

ONE SIDE THE OTHER SIDE

MARKING ON THE BODY

NOTICE IN INSTALLING VALVE. (3)

HIGH PRESSURE SIDE IN VALVE SHUT POSITION

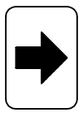

LOW PRESSURE SIDE IN VALVE SHUT POSITION

PRESSURE DIRECTION PLATE ON THE BODY SIDE FLANGE

NO	NAME OF PARTS	QTY	MATERIALS	SPECIFICATIONS
				JIS SPEC.
1	BODY	1	STAINLESS STEEL	SCS13A
2	BODY CAP	1	STAINLESS STEEL	SCS13A
3	STEM	1	STAINLESS STEEL	SUS630
4	BALL	1	STAINLESS STEEL	SUS316 (5) OR SCS14A (5)
7A	GLAND	1	STAINLESS STEEL	SCS13A
7B	GLAND	1	STAINLESS STEEL	SUS304
8	GLAND PACKING	1S	FLEXIBLE GRAPHITE	
16A	NAME PLATE	1	ALUMINUM	A1050P
16B	WASHER	1	CARBON STEEL	SS400
19	GASKET	1	FLEXIBLE GRAPHITE	
20	PACKING WASHER	1	STAINLESS STEEL	SUS316
30	BALL SEAT	2	STAINLESS STEEL	SUS316+Ni-Cr ALLOY
33	CAP NUT	1S	STAINLESS STEEL	SUS304 (ASTM 8)
34A	GLAND NUT	1S	STAINLESS STEEL	
34B	NUT	1S	STAINLESS STEEL	
35	CAP BOLT	1S	STAINLESS STEEL	SUS304 (ASTM B8)
36	GLAND BOLT	1S	STAINLESS STEEL	
47	THRUST WASHER	1	CARBON	
67	STEM BEARING	1	CARBON	
92	CONNECTOR	1	CARBON STEEL	S45C
93	BRACKET	1	DUCTILE IRON	FCD450-10
99	BOLT	1S	CARBON STEEL	SS400
102	GEAR UNIT	1		
143	SEAT SPRING	1	STAINLESS STEEL	SUS316
176	SEAT GASKET	1	FLEXIBLE GRAPHITE	
216	PRESSURE	1	STAINLESS STEEL	SUS304
	DIRECTION PLATE			
			1S=1 SET	

STANDARD		
	FACE TO FACE OR END TO END	ASME B16.10 CLASS 300
	END CONNECTION	JIS B2220 20K
	WALL THICKNESS	ASME B16.34 CLASS 300
	PRESSURE TEST	KITZ STANDARD
FIGURE		G-20UTB5H

DIMENSIONS UNIT;mm

NOMINAL SIZE mm	NOMINAL SIZE in.	d	H	D1	L	END FLANGE D	BOLT HOLE C	BOLT HOLE NO.	BOLT HOLE h	BOLT SIZE	g	(2) t	f	A	B	APPROX. MASS (kg)
100	4	100	292	310	305	225	185	8	23	M20	160	31.8	2	65.5	165	55
150	6	150	374	360	403	305	260	12	25	M22	230	36.6	2	88.5	210	131
200	8	200	409	500	502	350	305	12	25	M22	275	41.3	2	134	3770	199

NOTE (1) VALVE SIZE (inch) IDENTIFICATION.
(2) "t" SHALL BE IN ACCORDANCE WITH ASME B16.5 CLASS 300.
(3) PLEASE INSTALL VALVE SO THAT THE ARROW INDICATED SHOULD BE IN THE ABOVE DIRECTION.
(4) ALLOWABLE SEAT LEAKAGE SHALL BE IN ACCORDANCE WITH ANSI/FCI 70-2 CLASS Ⅳ.
(5) Cr PLATING.

METABALL
20K CAST STAINLESS STEEL
BALL VALVES

HIGH TEMPERATURE SERVICE. METAL SEAT.
FULL BORE, GEAR TYPE, FLANGED ENDS.

DATE APPD	JUL.21.'09	DRAWING NO	△		
APPD BY	S. SANADA	965-A40010	△		
CHKD BY	Y. ASAKAWA		△		
DSGND BY	S. KAJI		△		
DRAWD BY	Y. NAKAYAMA	REV-12	MARK	DATE	BY

KITZ CORPORATION

KITZ