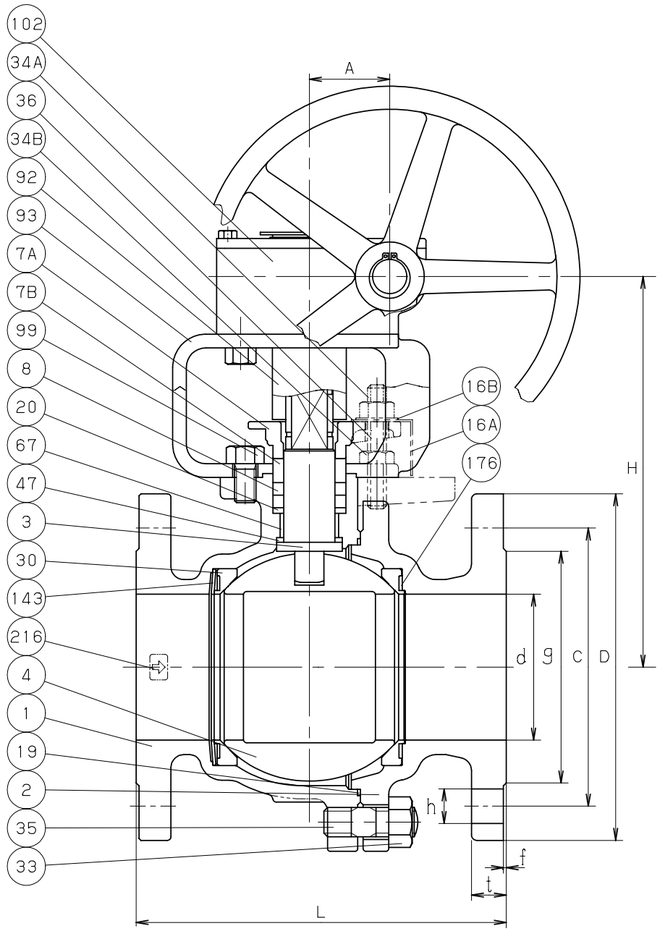

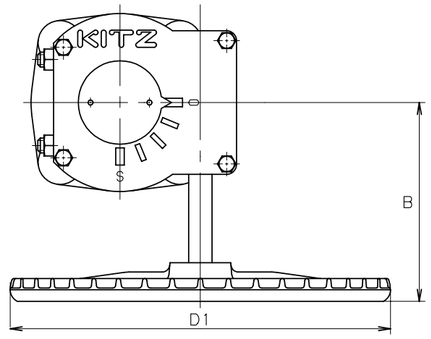

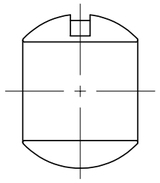

FOR SUS316

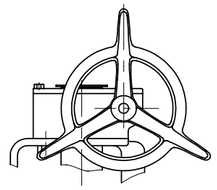

SIZE 8 ONLY

KITZ	CF8 (1) 6 -150 SCS13A
ONE SIDE	THE OTHER SIDE

MARKING ON THE BODY

NOTICE IN INSTALLING VALVE. (2)

HIGH PRESSURE SIDE IN VALVE SHUT POSITION → LOW PRESSURE SIDE IN VALVE SHUT POSITION

PRESSURE DIRECTION PLATE ON THE BODY SIDE FLANGE

DIMENSIONS UNIT;mm

NOMINAL SIZE in.	NOMINAL SIZE mm	d	H	D1	L	END FLANGE D	BOLT HOLE C	BOLT HOLE NO.	BOLT HOLE h	BOLT SIZE	g	t	f	A	B	APPROX. MASS (kg)	
5	125	125	332	360	356	254	216.0	8	22	3/4	186	23.9	1.6	88.5	210	80	
6	150	150	374	360	394	279	241.5	8	22	3/4	216	25.4	1.6	88.5	210	100	
8	200	200	409	500	457	343	298.5	8	22	3/4	270	28.6	1.6	134	377	156	

NOTE (1) VALVE SIZE(inch) IDENTIFICATION.
(2) PLEASE INSTALL VALVE SO THAT THE ARROW INDICATED SHOULD BE IN THE ABOVE DIRECTION.
(3) ALLOWABLE SEAT LEAKAGE SHALL BE IN ACCORDANCE WITH ANSI/FCI 70-2 CLASS Ⅳ.

NO	NAME OF PARTS	QTY	MATERIALS	SPECIFICATIONS
				JIS SPEC.
1	BODY	1	STAINLESS STEEL	SCS13A
2	BODY CAP	1	STAINLESS STEEL	SCS13A
3	STEM	1	STAINLESS STEEL	SUS630
4	BALL	1	STAINLESS STEEL	SUS316+Ni-Cr ALLOY OR
				SCS14A+Ni-Cr ALLOY
7A	GLAND	1	STAINLESS STEEL	SCS13A
7B	GLAND	1	STAINLESS STEEL	SUS304
8	GLAND PACKING	1S	FLEXIBLE GRAPHITE	
16A	NAME PLATE	1	ALUMINUM	A1050P
16B	WASHER	1	CARBON STEEL	SS400
19	GASKET	1	FLEXIBLE GRAPHITE	
20	PACKING WASHER	1	STAINLESS STEEL	SUS316
30	BALL SEAT	2	STAINLESS STEEL	SUS316+Ni-Cr ALLOY
33	CAP NUT	1S	STAINLESS STEEL	SUS304 (8)
34A	GLAND NUT	1S	STAINLESS STEEL	SUS304 (8)
34B	NUT	1S	STAINLESS STEEL	SUS304 (8)
35	CAP BOLT	1S	STAINLESS STEEL	SUS304 (B8)
36	GLAND BOLT	1S	STAINLESS STEEL	SUS304 (B8)
47	THRUST WASHER	1	CARBON	
67	STEM BEARING	1	CARBON	
92	CONNECTOR	1	CARBON STEEL	S45C
93	BRACKET	1	DUCTILE IRON	FCD-S
99	BOLT	1S	CARBON STEEL	SS400
102	GEAR UNIT	1		
143	SEAT SPRING	1	Ni-Cr-IRON ALLOY	INCONEL X-750
176	SEAT GASKET	1	FLEXIBLE GRAPHITE	
216	PRESSURE	1	STAINLESS STEEL	SUS304
	DIRECTION PLATE			
			1S=1 SET	

STANDARD		
	FACE TO FACE OR END TO END	ASME B16.10 CLASS 150
	END CONNECTION	ASME B16.5 CLASS 150
	WALL THICKNESS	ASME B16.34 CLASS 150
	PRESSURE TEST	API 598
FIGURE		G-150UTB6H

METABALL
CLASS 150 CAST STAINLESS STEEL
BALL VALVES

HIGH TEMPERATURE SERVICE. METAL SEAT.
FULL BORE. GEAR TYPE. FLANGED ENDS.

DATE APPD	JAN.05.'09	DRAWING NO	△		
APPD BY	S. SANADA	965-B10025	△		
CHKD BY	Y. ASAKAWA		△		
DSGND BY	Y. OSADA		△		
DRAWD BY	E. MITSUI	REV-10	MARK	DATE	BY

KITZ CORPORATION

KITZ