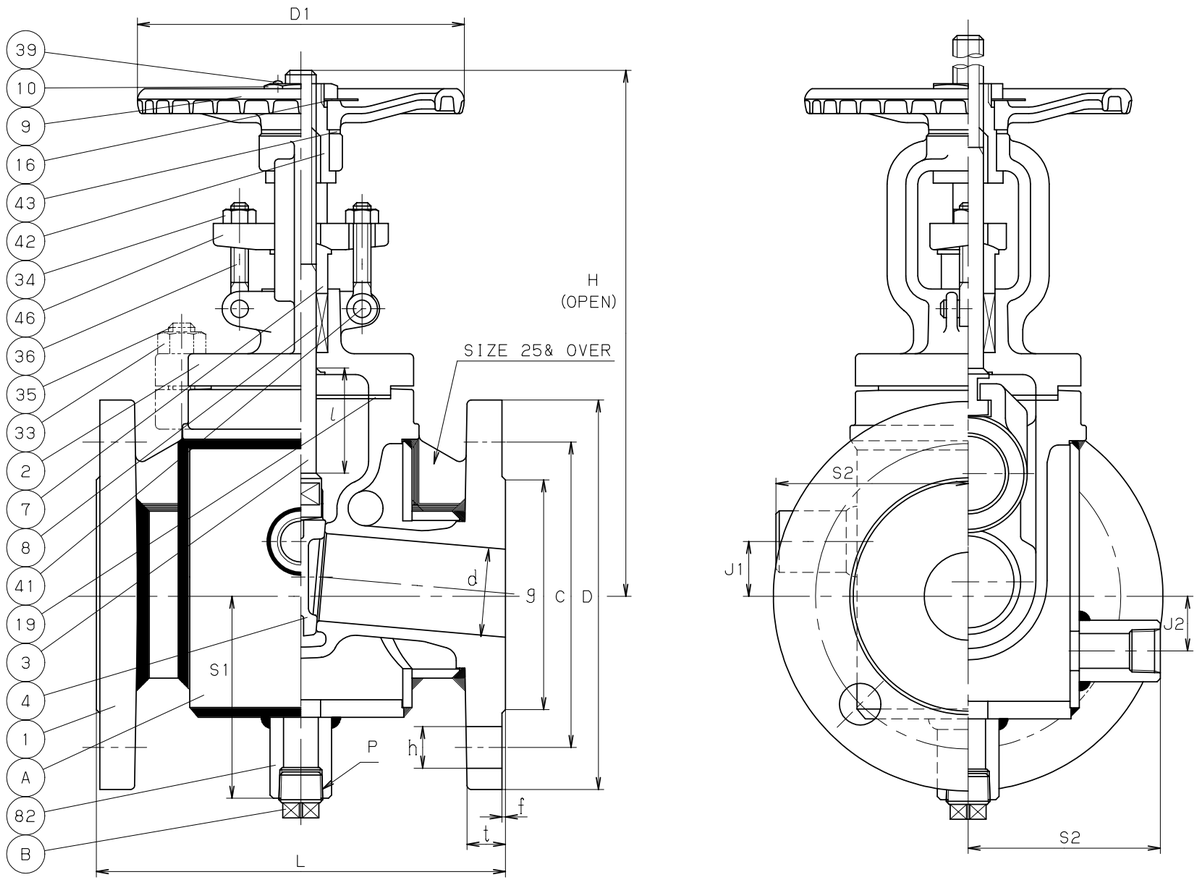

NO	NAME OF PARTS	QTY	MATERIALS	SPECIFICATIONS
				JIS SPEC.
1	BODY	1	STAINLESS STEEL	SCS14A
2	BONNET	1	STAINLESS STEEL	SCS14A
3	STEM	1	STAINLESS STEEL	SUS316
4	DISC	1	STAINLESS STEEL	SCS14A
7	GLAND	1	STAINLESS STEEL	SUS316
8	GLAND PACKING	1S	(1)	
9	HAND WHEEL	1	DUCTILE IRON	FCD400
10	WHEEL NUT	1	CARBON STEEL	SS400
16	NAME PLATE	1	ALUMINUM	A1050P
19	GASKET	1	NON-ASBESTOS SHEET	
33	BONNET NUT	4	STAINLESS STEEL	SUS304 (8)
34	GLAND NUT	2	STAINLESS STEEL	SUS304 (8)
35	BONNET BOLT	4	STAINLESS STEEL	SUS304 (B8)
36	GLAND BOLT	2	STAINLESS STEEL	SUS304 (B8)
39	SET SCREW	1	CARBON STEEL	
41	GLAND BOLT PIN	2	STAINLESS STEEL	SUS403
42	YOKE SLEEVE	1	DUCTILE NI-RESIST	
43	WHEEL WASHER	1	STAINLESS STEEL	SUS403
46	GLAND FLANGE	1	STAINLESS STEEL	SCS13A
82	SOCKET	1S	CARBON STEEL	S25C
A	JACKET	1S	CARBON STEEL	STPG370+SS400
B	PLUG	1	CARBON STEEL	S25C
			1S=1 SET	

STANDARD		
	FACE TO FACE OR END TO END	KITZ STANDARD
	END CONNECTION	JIS B2220 10K
	WALL THICKNESS	ASME B16.34 CLASS 150
	PRESSURE TEST	KITZ STANDARD
FIGURE		10UMAJM

DIMENSIONS. UNIT:mm

NOMINAL SIZE							END FLANGE											SOCKET			
							FLANGE		BOLT HOLE			BOLT									
mm	in	d	H	D1	L	l	SIZE	D	C	NO.	h	SIZE	g	t	f	S1	S2	P	NO.	J1	J2
15	1/2	17	199	100	169	23	40	140	105	4	19	M16	81	16	2	75	73	Rc1/2	3	10	10
20	3/4	22	213	100	169	28	40	140	105	4	19	M16	81	16	2	80	73	Rc1/2	3	12	12
25	1	25	232	100	177	32	50	155	120	4	19	M16	96	16	2	82	73	Rc1/2	3	25.5	14.5
40	1.1/2	40	283	140	188	47	65	175	140	4	19	M16	116	18	2	91	86	Rc1/2	3	40	25

NOTE (1) FLEXIBLE GRAPHITE + PTFE BRAIDED PACKING.

10K CAST STAINLESS STEEL GATE VALVES

BOLTED BONNET, OUTSIDE SCREW & YOKE, JACKET TYPE, FLANGED ENDS.

DATE APPD	JAN.05.'09	DRAWING NO	△		
APPD BY	S. SANADA	961-A20010	△		
CHKD BY	Y. KONO		△		
DSGND BY	M. SHIMIZU		△		
DRAWD BY	M. HORIGOME	REV-06	MARK	DATE	BY

KITZ CORPORATION

KITZ

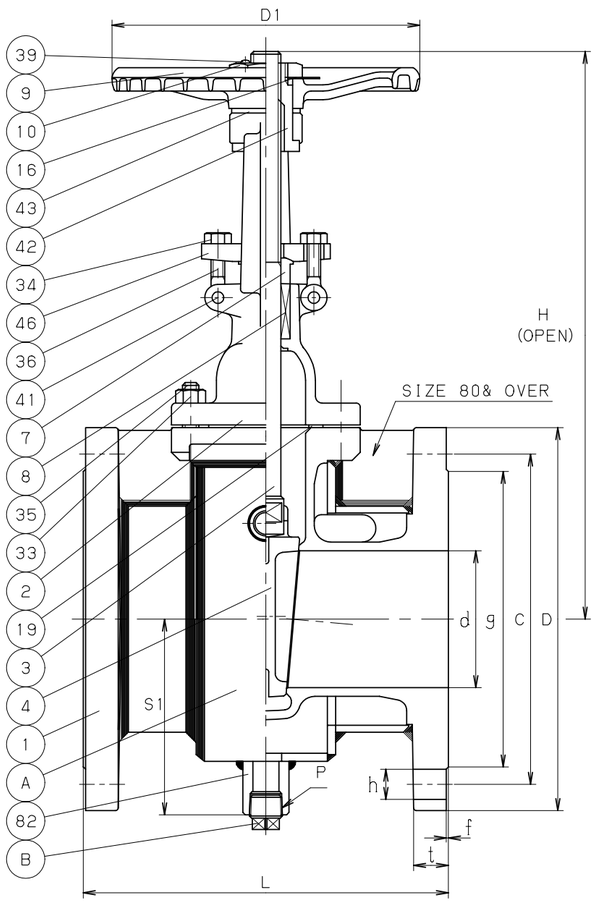

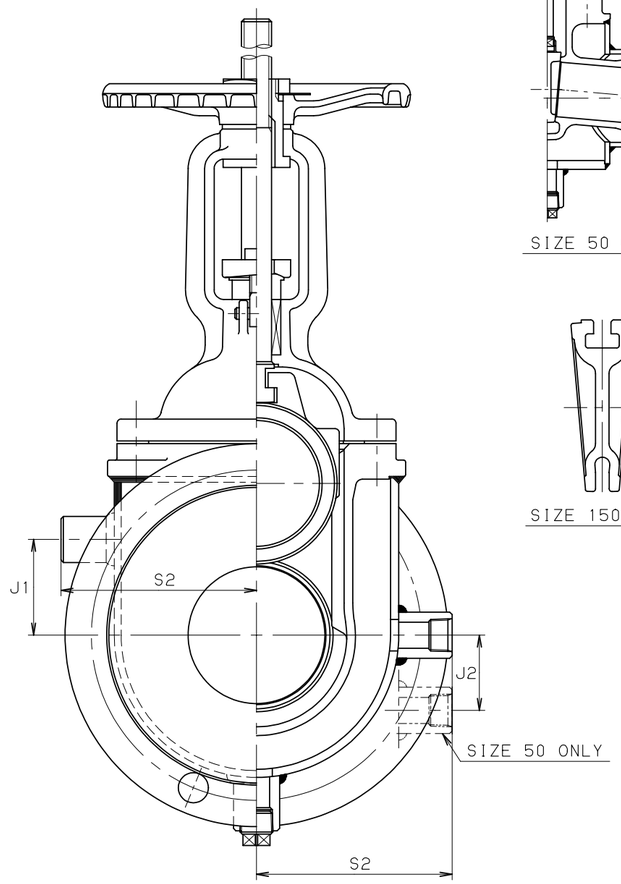

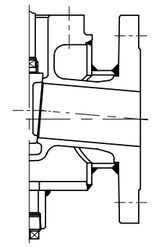

SIZE 50 ONLY

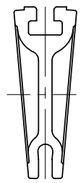

SIZE 150 ONLY

NO	NAME OF PARTS	QTY	MATERIALS	SPECIFICATIONS
				JIS SPEC.
1	BODY	1	STAINLESS STEEL	SCS14A
2	BONNET	1	STAINLESS STEEL	SCS14A
3	STEM	1	STAINLESS STEEL	SUS316
4	DISC	1	STAINLESS STEEL	SCS14A
7	GLAND	1	STAINLESS STEEL	SUS316
8	GLAND PACKING	1S	(1)	
9	HAND WHEEL	1	DUCTILE IRON	FCD400
10	WHEEL NUT	1	CARBON STEEL	SS400
16	NAME PLATE	1	ALUMINUM	A1050P
19	GASKET	1	NON-ASBESTOS SHEET	
33	BONNET NUT	1S	STAINLESS STEEL	SUS304 (8)
34	GLAND NUT	2	STAINLESS STEEL	SUS304 (8)
35	BONNET BOLT	1S	STAINLESS STEEL	SUS304 (B8)
36	GLAND BOLT	2	STAINLESS STEEL	SUS304 (B8)
39	SET SCREW	1	CARBON STEEL	
41	GLAND BOLT PIN	2	STAINLESS STEEL	SUS403
42	YOKE SLEEVE	1	DUCTILE NI-RESIST	
43	WHEEL WASHER	1	STAINLESS STEEL	SUS403
46	GLAND FLANGE	1	STAINLESS STEEL	SCS13A
82	SOCKET	1S	CARBON STEEL	S25C
A	JACKET	1S	CARBON STEEL	STPG370+SS400
B	PLUG	1	CARBON STEEL	S25C
			1S=1 SET	

DIMENSIONS. UNIT:mm

NOMINAL SIZE							END FLANGE											SOCKET			
							FLANGE		BOLT HOLE			BOLT									
mm	in	d	H	D1	L	l	SIZE	D	C	NO.	h	SIZE	g	t	f	S1	S2	P	NO.	J1	J2
50	2	50	322	160	201	59	80	185	150	8	19	M16	126	18	2	100	92	Rc1/2	3	35	30
80	3	80	447	200	217	91	100	210	175	8	19	M16	151	18	2	113	113	Rc1/2	3	55	——
100	4	100	523	225	260	109	150	280	240	8	23	M20	212	22	2	144	144	Rc3/4	3	70	——
150	6	150	710	250	279	163	200	330	290	12	23	M20	262	22	2	176	176	Rc3/4	3	115	——

NOTE (1) FLEXIBLE GRAPHITE + PTFE BRAIDED PACKING.

STANDARD		
	FACE TO FACE OR END TO END	KITZ STANDARD
	END CONNECTION	JIS B2220 10K
	WALL THICKNESS	ASME B16.34 CLASS 150
	PRESSURE TEST	KITZ STANDARD
FIGURE		10UMAJM

10K CAST STAINLESS STEEL GATE VALVES

BOLTED BONNET, OUTSIDE SCREW & YOKE, JACKET TYPE, FLANGED ENDS.

DATE APPD	JAN.05.'09	DRAWING NO	△		
APPD BY	S. SANADA	961-A20011	△		
CHKD BY	Y. KONO		△		
DSGND BY	M. SHIMIZU		△		
DRAWD BY	M. HORIGOME	REV-04	MARK	DATE	BY

KITZ CORPORATION

KITZ