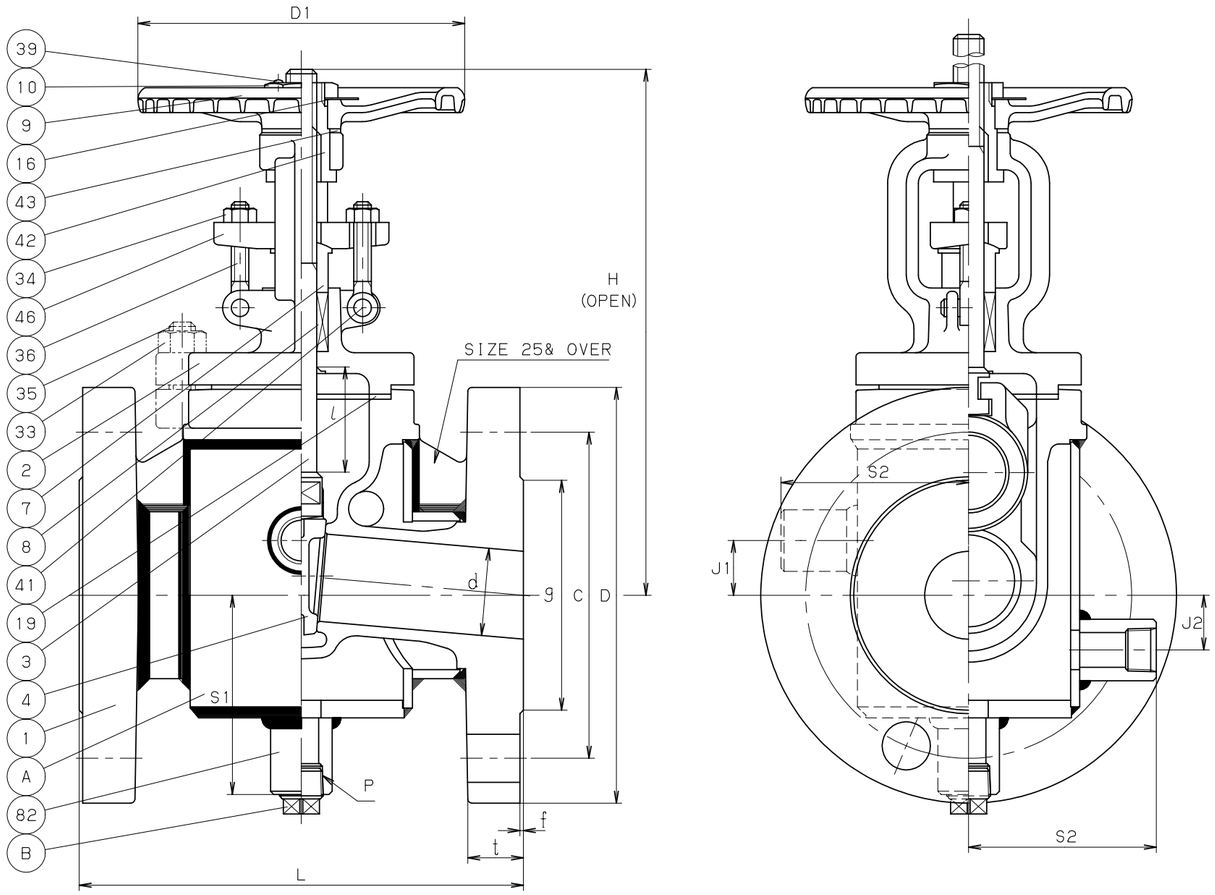

NO	NAME OF PARTS	QTY	MATERIALS	SPECIFICATIONS
				JIS SPEC.
1	BODY	1	STAINLESS STEEL	SCS14A
2	BONNET	1	STAINLESS STEEL	SCS14A
3	STEM	1	STAINLESS STEEL	SUS316
4	DISC	1	STAINLESS STEEL	SCS14A
7	GLAND	1	STAINLESS STEEL	SUS316
8	GLAND PACKING	1S	(1)	
9	HAND WHEEL	1	DUCTILE IRON	FCD400
10	WHEEL NUT	1	CARBON STEEL	SS400
16	NAME PLATE	1	ALUMINUM	A1050P
19	GASKET	1	NON-ASBESTOS SHEET	
33	BONNET NUT	4	STAINLESS STEEL	SUS304 (8)
34	GLAND NUT	2	STAINLESS STEEL	SUS304 (8)
35	BONNET BOLT	4	STAINLESS STEEL	SUS304 (B8)
36	GLAND BOLT	2	STAINLESS STEEL	SUS304 (B8)
39	SET SCREW	1	CARBON STEEL	
41	GLAND BOLT PIN	2	STAINLESS STEEL	SUS403
42	YOKE SLEEVE	1	DUCTILE NI-RESIST	
43	WHEEL WASHER	1	STAINLESS STEEL	SUS403
46	GLAND FLANGE	1	STAINLESS STEEL	SCS13A
82	SOCKET	1S	CARBON STEEL	S25C
A	JACKET	1S	CARBON STEEL	STPG370+SS400
B	PLUG	1	MALLEABLE IRON	S25C
			1S=1 SET	

STANDARD		
	FACE TO FACE OR END TO END	KITZ STANDARD
	END CONNECTION	JIS B2220 20K
	WALL THICKNESS	ASME B16.34 CLASS 300
	PRESSURE TEST	KITZ STANDARD
FIGURE		20UMAJM

DIMENSIONS. UNIT:mm

NOMINAL SIZE							END FLANGE											SOCKET			
							FLANGE		BOLT HOLE			BOLT									
mm	in	d	H	D1	L	l	SIZE	D	C	NO.	h	SIZE	g	t	f	S1	S2	P	NO.	J1	J2
15	1/2	17	199	100	173	23	40	140	105	4	19	M16	81	18	2	75	73	Rc1/2	3	10	10
20	3/4	22	213	100	173	28	40	140	105	4	19	M16	81	18	2	80	73	Rc1/2	3	12	12
25	1	25	232	100	181	32	50	155	120	8	19	M16	96	18	2	82	73	Rc1/2	3	25.5	14.5
40	1.1/2	40	283	140	192	47	65	175	140	8	19	M16	116	20	2	91	86	Rc1/2	3	40	25

NOTE (1) FLEXIBLE GRAPHITE + PTFE BRAIDED PACKING.

20K CAST STAINLESS STEEL GATE VALVES

BOLTED BONNET, OUTSIDE SCREW & YOKE, JACKET TYPE, FLANGED ENDS.

DATE APPD	JAN.05.'09	DRAWING NO	△		
APPD BY	S. SANADA	961-A40012	△		
CHKD BY	Y. KONO		△		
DSGND BY	K. NAKAMURA		△		
DRAWD BY	E. MITSUI	REV-06	MARK	DATE	BY

KITZ CORPORATION

KITZ

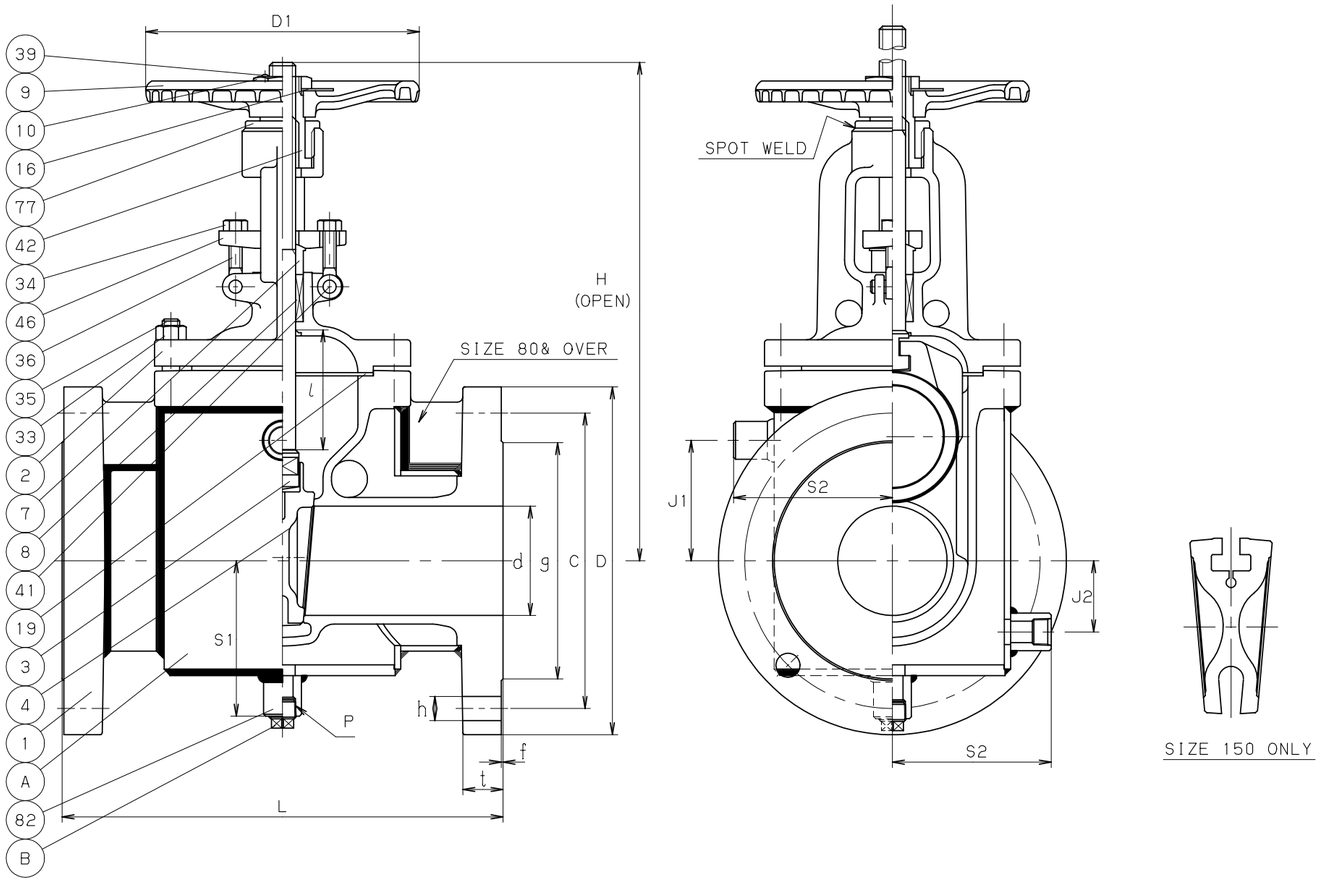

DIMENSIONS.

UNIT;mm

NOMINAL SIZE							END FLANGE											SOCKET			
							FLANGE		BOLT HOLE			BOLT									
mm	in	d	H	D1	L	l	SIZE	D	C	NO.	h	SIZE	g	t	f	S1	S2	P	NO.	J1	J2
50	2	50	353	180	270	57	80	200	160	8	23	M20	132	22	2	103	105	Rc1/2	3	45	30
80	3	80	470	225	289	89	100	225	185	8	23	M20	160	24	2	125	118	Rc1/2	3	85	50
100	4	100	560	250	386	111	150	305	260	12	25	M22	230	28	2	145	148	Rc3/4	3	110	65
150	6	150	753	350	434	163	200	350	305	12	25	M22	275	30	2	181	174	Rc3/4	3	140	95

NOTE (1) FLEXIBLE GRAPHITE + PTFE BRAIDED PACKING.

NO	NAME OF PARTS	QTY	MATERIALS	SPECIFICATIONS
				JIS SPEC.
1	BODY	1	STAINLESS STEEL	SCS14A
2	BONNET	1	STAINLESS STEEL	SCS14A
3	STEM	1	STAINLESS STEEL	SUS316
4	DISC	1	STAINLESS STEEL	SCS14A
7	GLAND	1	STAINLESS STEEL	SUS316
8	GLAND PACKING	1S	(1)	
9	HAND WHEEL	1	DUCTILE IRON	FCD400
10	WHEEL NUT	1	CARBON STEEL	SS400
16	NAME PLATE	1	ALUMINUM	A1050P
19	GASKET	1	NON-ASBESTOS SHEET	
33	BONNET NUT	1S	STAINLESS STEEL	SUS304 (8)
34	GLAND NUT	2	STAINLESS STEEL	SUS304 (8)
35	BONNET BOLT	1S	STAINLESS STEEL	SUS304 (B8)
36	GLAND BOLT	2	STAINLESS STEEL	SUS304 (B8)
39	SET SCREW	1	CARBON STEEL	
41	GLAND BOLT PIN	2	STAINLESS STEEL	SUS403
42	YOKE SLEEVE	1	DUCTILE NI-RESIST	
46	GLAND FLANGE	1	STAINLESS STEEL	SCS13A
77	SLEEVE NUT	1	STAINLESS STEEL	SUS403
82	SOCKET	1S	CARBON STEEL	S25C
A	JACKET	1S	CARBON STEEL	STPG370+SS400
B	PLUG	1	MALLEABLE IRON	S25C
			1S=1 SET	

STANDARD		
	FACE TO FACE OR END TO END	KITZ STANDARD
	END CONNECTION	JIS B2220 20K
	WALL THICKNESS	ASME B16.34 CLASS 300
	PRESSURE TEST	KITZ STANDARD
FIGURE		20UMAJM

20K CAST STAINLESS STEEL GATE VALVES

BOLTED BONNET, OUTSIDE SCREW & YOKE, JACKET TYPE, FLANGED ENDS.

DATE APPD	JAN.05.'09	DRAWING NO	△		
APPD BY	S. SANADA	961-A40013	△		
CHKD BY	Y. KONO		△		
DSGND BY	K. NAKAMURA		△		
DRAWD BY	E. MITSUI	REV-05	MARK	DATE	BY

KITZ CORPORATION

KITZ