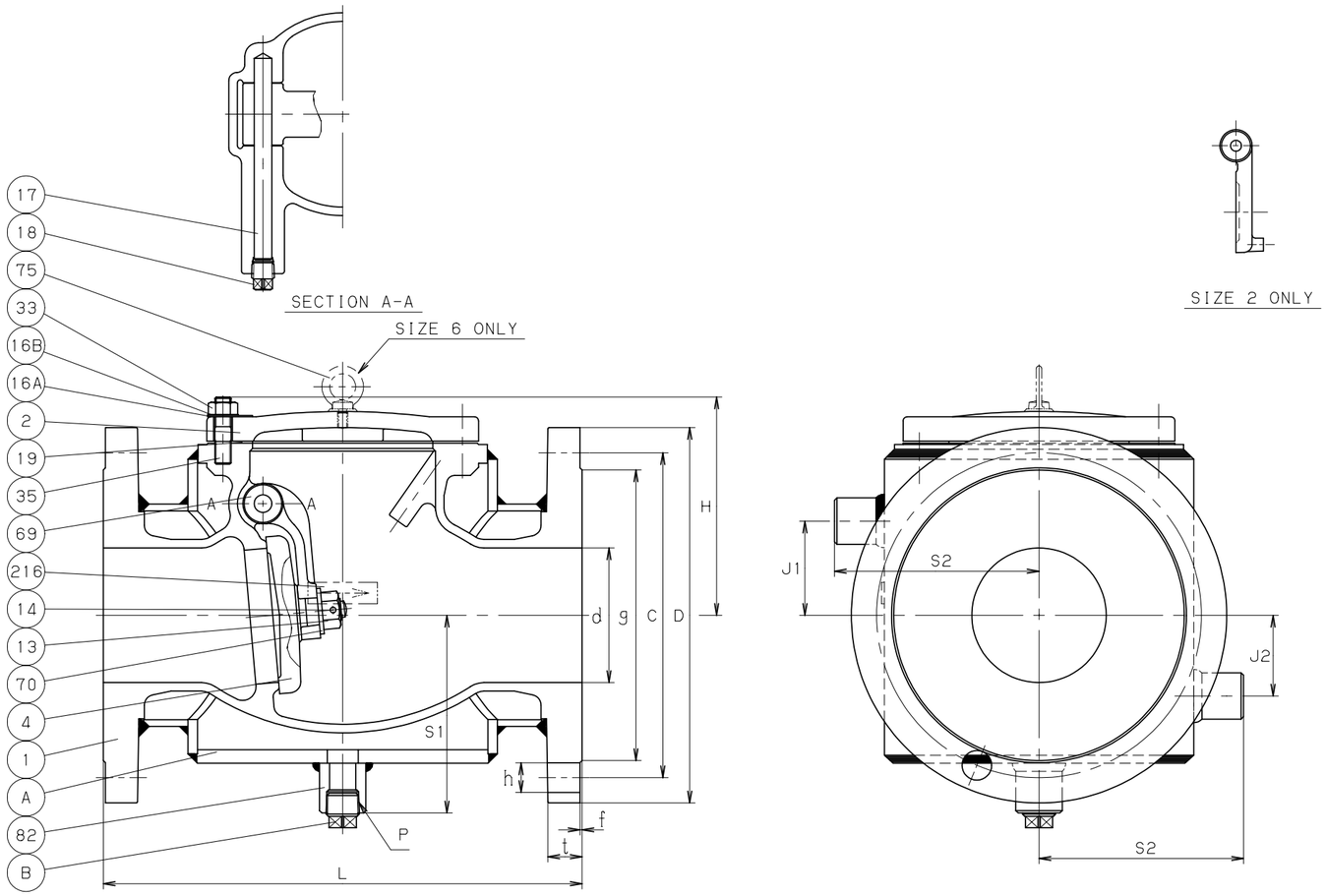

NO	NAME OF PARTS	QTY	MATERIALS	SPECIFICATIONS
				JIS SPEC.
1	BODY	1	STAINLESS STEEL	SCS14A
2	COVER	1	STAINLESS STEEL	SCS14A
4	DISC	1	STAINLESS STEEL	SCS14A
13	DISC NUT	1	STAINLESS STEEL	SUS316
14	PIN	1	STAINLESS STEEL	SUS316L
16A	NAME PLATE	1	ALUMINUM	A1050P
16B	WASHER	1	STAINLESS STEEL	SUS304
17	HINGE PIN	1	STAINLESS STEEL	SUS316
18	PLUG	1	STAINLESS STEEL	SUS316
19	GASKET	1	NON-ASBESTOS SHEET	
33	COVER NUT	1S	STAINLESS STEEL	SUS304 (8)
35	COVER BOLT	1S	STAINLESS STEEL	SUS304 (B8)
69	ARM	1	STAINLESS STEEL	SCS14A
70	WASHER	1	STAINLESS STEEL	SUS316
		1	STAINLESS STEEL	SUS316L
				(SIZE 3& OVER)
75	EYE BOLT	1	CARBON STEEL	S25C
82	SOCKET	1S	CARBON STEEL	S25C
216	FLOW DIRECTION PLATE	1	STAINLESS STEEL	SUS304
A	JACKET	1S	CARBON STEEL	STPG370+SS400
B	PLUG	1	CARBON STEEL	S25C
			1S=1 SET	

DIMENSIONS. UNIT:mm

NOMINAL SIZE					END FLANGE											SOCKET			
					FLANGE		BOLT HOLE			BOLT									
in.	mm	d	H	L	SIZE	D	C	NO.	h	SIZE	g	t	f	S1	S2	P	NO.	J1	J2
2	50	50	122	241	3	190	152.5	4	19	5/8	127	19.1	1.6	103	105	Rc1/2	3	45	30
3	80	80	149	292	4	229	190.5	8	19	5/8	157	23.9	1.6	128	131	Rc1/2	3	60	50
4	100	100	171	356	6	279	241.5	8	22	3/4	216	25.4	1.6	151	157	Rc3/4	3	70	60
6	150	150	214	406	8	343	298.5	8	22	3/4	270	28.6	1.6	191	189	Rc3/4	3	105	105

STANDARD		
	FACE TO FACE OR END TO END	KITZ STANDARD
	END CONNECTION	ASME B16.5 CLASS 150
	WALL THICKNESS	ASME B16.34 CLASS 150
	PRESSURE TEST	API 598
FIGURE		150UOAJM

CLASS 150 CAST STAINLESS STEEL SWING CHECK VALVES

BOLTED COVER, JACKET TYPE, FLANGED ENDS.

DATE APPD	JAN.05.'09	DRAWING NO	△		
APPD BY	S. SANADA	963-B10007	△		
CHKD BY	Y. KONO		△		
DSGND BY	K. NAKAMURA		△		
DRAWD BY	E. MITSUI	REV-08	MARK	DATE	BY

KITZ CORPORATION

KITZ