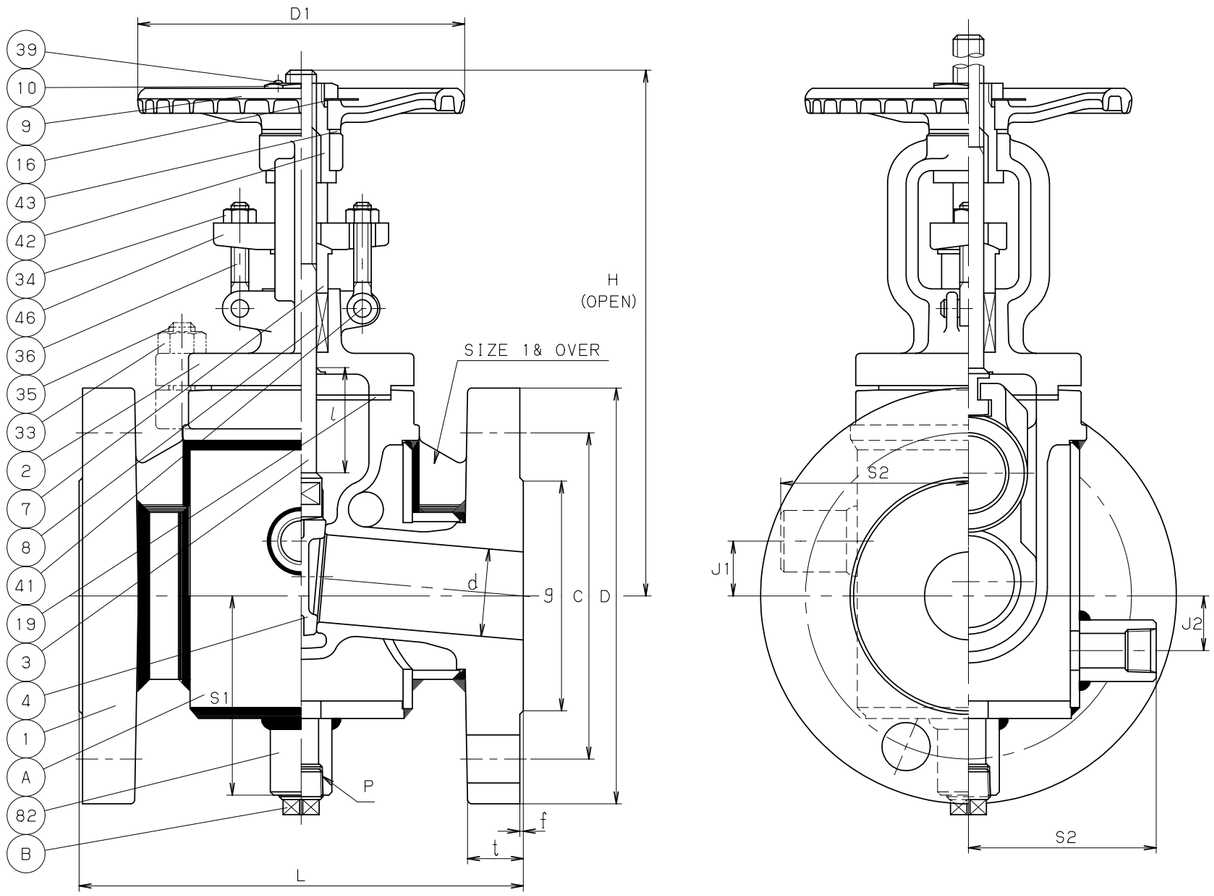

NO	NAME OF PARTS	QTY	MATERIALS	SPECIFICATIONS
				JIS SPEC.
1	BODY	1	STAINLESS STEEL	SCS14A
2	BONNET	1	STAINLESS STEEL	SCS14A
3	STEM	1	STAINLESS STEEL	SUS316
4	DISC	1	STAINLESS STEEL	SCS14A
7	GLAND	1	STAINLESS STEEL	SUS316
8	GLAND PACKING	1S	(1)	
9	HAND WHEEL	1	DUCTILE IRON	FCD400
10	WHEEL NUT	1	CARBON STEEL	SS400
16	NAME PLATE	1	ALUMINUM	A1050P
19	GASKET	1	NON-ASBESTOS SHEET	
33	BONNET NUT	4	STAINLESS STEEL	SUS304 (8)
34	GLAND NUT	2	STAINLESS STEEL	SUS304 (8)
35	BONNET BOLT	4	STAINLESS STEEL	SUS304 (B8)
36	GLAND BOLT	2	STAINLESS STEEL	SUS304 (B8)
39	SET SCREW	1	CARBON STEEL	
41	GLAND BOLT PIN	2	STAINLESS STEEL	SUS403
42	YOKE SLEEVE	1	DUCTILE NI-RESIST	
43	WHEEL WASHER	1	STAINLESS STEEL	SUS403
46	GLAND FLANGE	1	STAINLESS STEEL	SCS13A
82	SOCKET	1S	CARBON STEEL	S25C
A	JACKET	1S	CARBON STEEL	STPG370+SS400
B	PLUG	1	CARBON STEEL	S25C
			1S=1 SET	

STANDARD		
	FACE TO FACE OR END TO END	KITZ STANDARD
	END CONNECTION	ASME B16.5 CLASS 300
	WALL THICKNESS	ASME B16.34 CLASS 300
	PRESSURE TEST	API 598
FIGURE		300UMAJM

DIMENSIONS. UNIT:mm

NOMINAL SIZE							END FLANGE											SOCKET			
							FLANGE		BOLT HOLE			BOLT									
in	mm	d	H	D1	L	l	SIZE	D	C	NO.	h	SIZE	g	t	f	S1	S2	P	NO.	J1	J2
1/2	15	17	199	100	178	23	1.1/2	156	114.5	4	22	3/4	73	20.7	1.6	75	73	Rc1/2	3	10	10
3/4	20	22	213	100	178	28	1.1/2	156	114.5	4	22	3/4	73	20.7	1.6	80	73	Rc1/2	3	12	12
1	25	25	232	100	190	32	2	165	127	8	19	5/8	92	22.3	1.6	82	73	Rc1/2	3	25.5	14.5
1.1/2	40	40	283	140	203	47	2.1/2	190	149	8	22	3/4	105	25.4	1.6	91	86	Rc1/2	3	40	25

NOTE (1) FLEXIBLE GRAPHITE + PTFE BRAIDED PACKING.

CLASS 300 CAST STAINLESS STEEL GATE VALVES

BOLTED BONNET, OUTSIDE SCREW & YOKE, JACKET TYPE, FLANGED ENDS.

DATE APPD	JAN.05.'09	DRAWING NO	△		
APPD BY	S. SANADA	961-B20017	△		
CHKD BY	Y. KONO		△		
DSGND BY	M. SHIMIZU		△		
DRAWD BY	M. HORIGOME	REV-04	MARK	DATE	BY

KITZ CORPORATION

KITZ

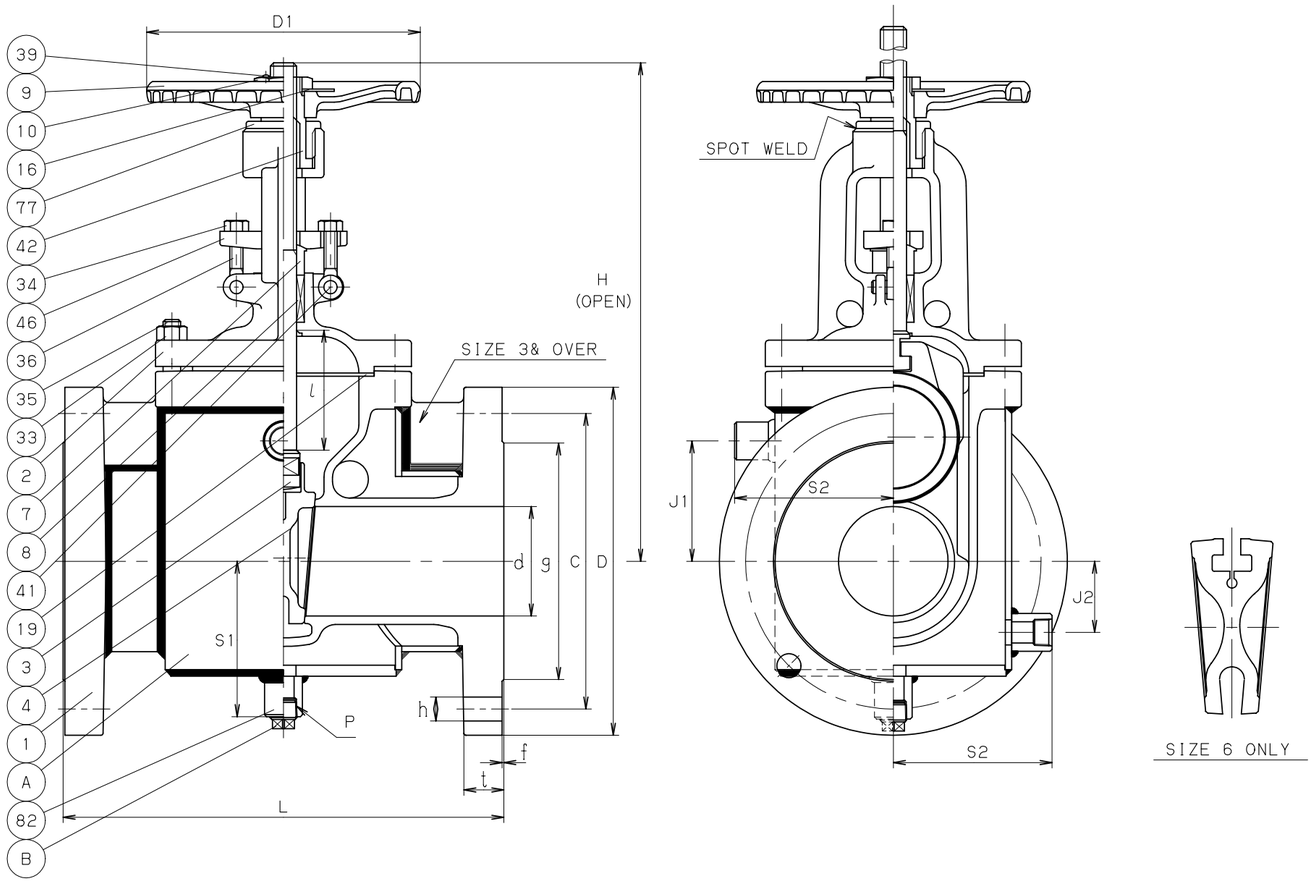

NO	NAME OF PARTS	QTY	MATERIALS	SPECIFICATIONS
				JIS SPEC.
1	BODY	1	STAINLESS STEEL	SCS14A
2	BONNET	1	STAINLESS STEEL	SCS14A
3	STEM	1	STAINLESS STEEL	SUS316
4	DISC	1	STAINLESS STEEL	SCS14A
7	GLAND	1	STAINLESS STEEL	SUS316
8	GLAND PACKING	1S	(1)	
9	HAND WHEEL	1	DUCTILE IRON	FCD400
10	WHEEL NUT	1	CARBON STEEL	SS400
16	NAME PLATE	1	ALUMINUM	A1050P
19	GASKET	1	NON-ASBESTOS SHEET	
33	BONNET NUT	1S	STAINLESS STEEL	SUS304 (8)
34	GLAND NUT	2	STAINLESS STEEL	SUS304 (8)
35	BONNET BOLT	1S	STAINLESS STEEL	SUS304 (B8)
36	GLAND BOLT	2	STAINLESS STEEL	SUS304 (B8)
39	SET SCREW	1	CARBON STEEL	
41	GLAND BOLT PIN	2	STAINLESS STEEL	SUS403
42	YOKE SLEEVE	1	DUCTILE NI-RESIST	
46	GLAND FLANGE	1	STAINLESS STEEL	SCS13A
77	SLEEVE NUT	1	STAINLESS STEEL	SUS403
82	SOCKET	1S	CARBON STEEL	S25C
A	JACKET	1S	CARBON STEEL	STPG370+SS400
B	PLUG	1	CARBON STEEL	S25C
			1S=1 SET	

DIMENSIONS. UNIT;mm

NOMINAL SIZE							END FLANGE											SOCKET			
							FLANGE		BOLT HOLE			BOLT									
in	mm	d	H	D1	L	l	SIZE	D	C	NO.	h	SIZE	g	t	f	S1	S2	P	NO.	J1	J2
2	50	50	353	180	283	57	3	210	168	8	22	3/4	127	28.6	1.6	103	105	Rc1/2	3	45	30
3	80	80	470	225	305	89	4	254	200	8	22	3/4	157	31.8	1.6	125	118	Rc1/2	3	85	50
4	100	100	560	250	403	111	6	318	270	12	22	3/4	216	36.6	1.6	145	148	Rc3/4	3	110	65
6	150	150	753	350	457	163	8	381	330	12	25	7/8	270	41.3	1.6	181	174	Rc3/4	3	140	95

NOTE (1) FLEXIBLE GRAPHITE + PTFE BRAIDED PACKING.

STANDARD		
	FACE TO FACE OR END TO END	KITZ STANDARD
	END CONNECTION	ASME B16.5 CLASS 300
	WALL THICKNESS	ASME B16.34 CLASS 300
	PRESSURE TEST	API 598
FIGURE		300UMAJM

CLASS 300 CAST STAINLESS STEEL GATE VALVES

BOLTED BONNET, OUTSIDE SCREW & YOKE, JACKET TYPE, FLANGED ENDS.

DATE APPD	JAN.05.'09	DRAWING NO	△		
APPD BY	S. SANADA	961-B20018	△		
CHKD BY	Y. KONO		△		
DSGND BY	H. NISHIDATE		△		
DRAWD BY	E. MITSUI	REV-03	MARK	DATE	BY

KITZ CORPORATION

KITZ