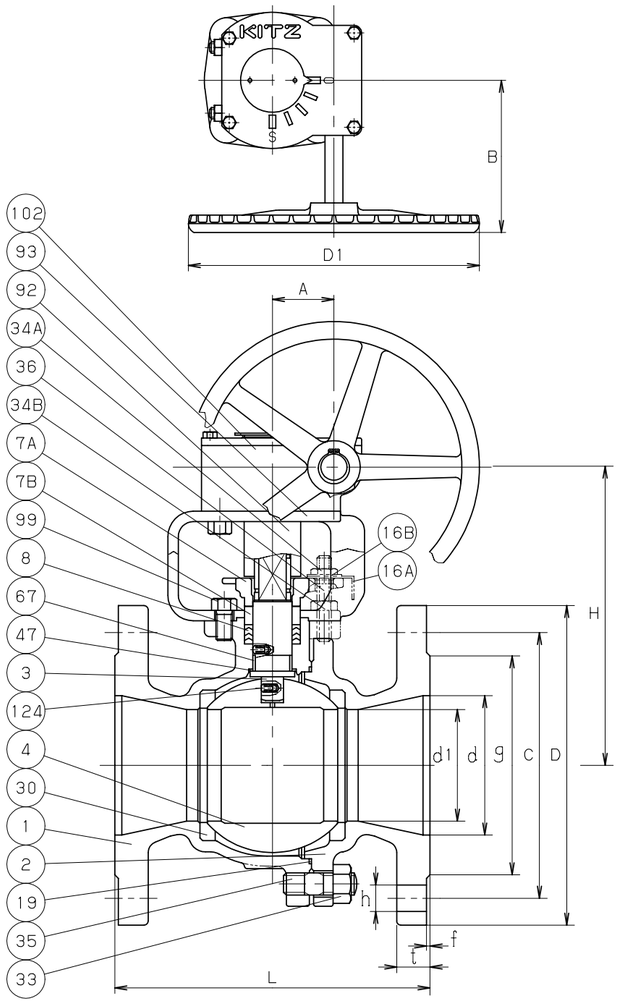

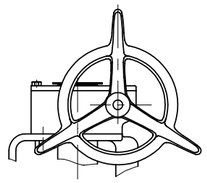

SIZE 12 ONLY

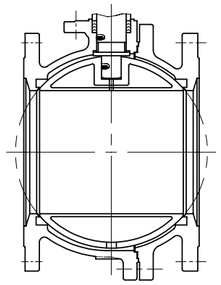

SIZE 12 ONLY

(2)

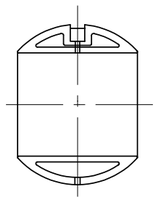

SIZE 10& OVER

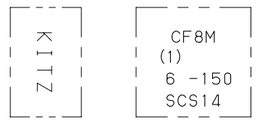

ONE SIDE THE OTHER SIDE

MARKING ON THE BODY

DIMENSIONS UNIT;MM

NOMINAL SIZE							END FLANGE											
								BOLT HOLE			BOLT							
IN	MM	d	d1	H	D1	L	D	C	NO.	h	SIZE	g	t	f	A	B		
6	150	150	125	312	310	267	279	241.5	8	22	3/4	216	25.4	1.6	65.5	165		
8	200	200	150	337	310	292	343	298.5	8	22	3/4	270	28.6	1.6	65.5	165		
10	250	250	200	414	360	330	406	362.0	12	25	7/8	324	30.2	1.6	88.5	210		
12	300	300	250	477	500	356	483	432.0	12	25	7/8	381	31.8	1.6	93.5	363		

NOTE (1) VALVE SIZE(INCH) IDENTIFICATION.
(2) THE BALL MAY PROTRUDE BEYOND THE BODY END FLANGED FACES WHEN THE VALVE IS THE CLOSED POSITION. BE SURE TO OPEN THE VALVE FULLY BEFORE MOUNTING OR DISMOUNTING.

NO	NAME OF PARTS	QTY	MATERIALS	SPECIFICATIONS
				JIS SPEC.
1	BODY	1	STAINLESS STEEL	SCS14A
2	BODY CAP	1	STAINLESS STEEL	SCS14A
3	STEM	1	STAINLESS STEEL	SUS316
4	BALL	1	STAINLESS STEEL	SCS14A
7A	GLAND	1	STAINLESS STEEL	SCS13A
7B	GLAND	1	STAINLESS STEEL	SUS304
8	GLAND PACKING	1S	PTFE	
16A	NAME PLATE	1	ALUMINUM	A1050P
16B	WASHER	1	CARBON STEEL	SS400
19	GASKET	1	PTFE	
30	BALL SEAT	2	HYPATITE PTFE	
33	CAP NUT	1S	STAINLESS STEEL	SUS304 (8)
34A	GLAND NUT	1S	STAINLESS STEEL	SUS304 (8)
34B	NUT	1S	STAINLESS STEEL	SUS304 (8)
35	CAP BOLT	1S	STAINLESS STEEL	SUS304 (B8)
36	GLAND BOLT	1S	STAINLESS STEEL	.
47	THRUST WASHER	1	G/F PTFE	
67	STEM BEARING	1	G/F PTFE	
92	CONNECTOR	1	CARBON STEEL	S45C
93	BRACKET	1	DUCTILE IRON	FCD-S
99	BOLT	1S	CARBON STEEL	SS400
102	GEAR UNIT	1		
124	SPRING & PIN	1S	STAINLESS STEEL	SUS316-WPA & SUS316
			1S=1 SET	

STANDARD		
	FACE TO FACE OR END TO END	ASME B16.10 CLASS 150
	END CONNECTION	ASME B16.5 CLASS 150
	WALL THICKNESS	ASME B16.34 CLASS 150
	PRESSURE TEST	API 598
FIGURE		G-150UTRM

CLASS 150 CAST STAINLESS STEEL BALL VALVES

ANTI-STATIC DEVICE, REDUCED BORE, GEAR TYPE, FLANGED ENDS.

DATE APPD	JAN.05.'09	DRAWING NO	△		
APPD BY	S. SANADA	965-B10058	△		
CHKD BY	Y. ASAKAWA		△		
DSGND BY	Y. YAMASHITA		△		
DRAWD BY	E. MITSUI	REV-03	MARK	DATE	BY

KITZ CORPORATION

KITZ