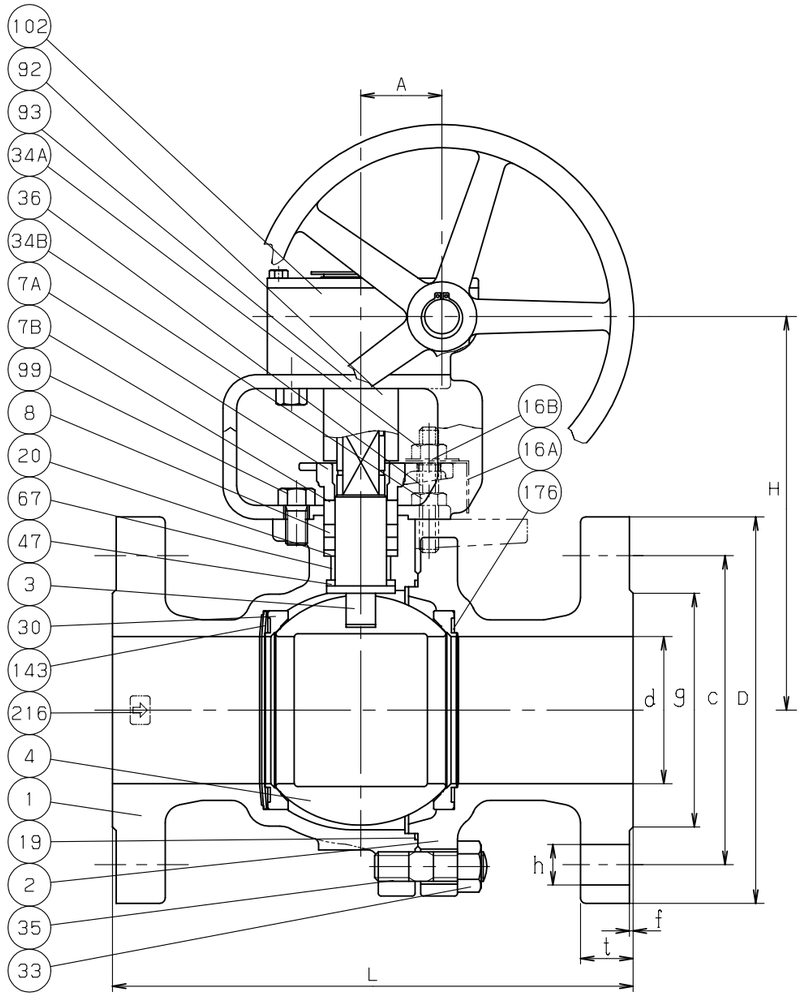

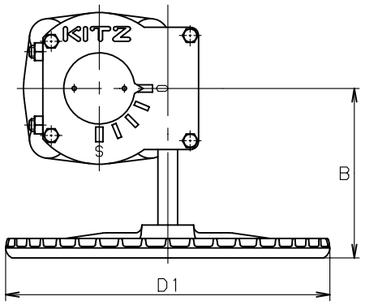

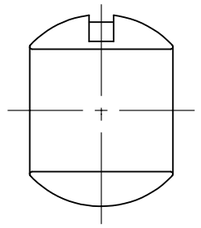

FOR SUS316

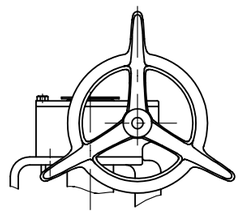

SIZE 8 ONLY

KITZ	CF8 (1) 6 -300 SCS13A
ONE SIDE	THE OTHER SIDE

MARKING ON THE BODY

NOTICE IN INSTALLING VALVE. (2)

HIGH PRESSURE SIDE IN VALVE SHUT POSITION → LOW PRESSURE SIDE IN VALVE SHUT POSITION

PRESSURE DIRECTION PLATE ON THE BODY SIDE FLANGE

DIMENSIONS

UNIT;mm

NOMINAL SIZE						END FLANGE											
							BOLT HOLE			BOLT						APPROX. MASS	
in.	mm	d	H	D1	L	D	C	NO.	h	SIZE	g	t	f	A	B	(kg)	
4	100	100	292	310	305	254	200.0	8	22	3/4	157	31.8	1.6	65.5	165	61	
6	150	150	374	360	403	318	270.0	12	22	3/4	216	36.6	1.6	88.5	210	134	
8	200	200	409	500	502	381	330.0	12	25	7/8	270	41.3	1.6	134	377	224	

NOTE (1) VALVE SIZE(inch) IDENTIFICATION.
(2) PLEASE INSTALL VALVE SO THAT THE ARROW INDICATED SHOULD BE IN THE ABOVE DIRECTION.
(3) ALLOWABLE SEAT LEAKAGE SHALL BE IN ACCORDANCE WITH ANSI/FCI 70-2 CLASS Ⅵ.

NO	NAME OF PARTS	QTY	MATERIALS	SPECIFICATIONS
				JIS SPEC.
1	BODY	1	STAINLESS STEEL	SCS13A
2	BODY CAP	1	STAINLESS STEEL	SCS13A
3	STEM	1	STAINLESS STEEL	SUS630
4	BALL	1	STAINLESS STEEL	SUS316+Ni-Cr ALLOY OR
				SCS14A+Ni-Cr ALLOY
7A	GLAND	1	STAINLESS STEEL	SCS13A
7B	GLAND	1	STAINLESS STEEL	SUS304
8	GLAND PACKING	1S	FLEXIBLE GRAPHITE	
16A	NAME PLATE	1	ALUMINUM	A1050P
16B	WASHER	1	CARBON STEEL	SS400
19	GASKET	1	FLEXIBLE GRAPHITE	
20	PACKING WASHER	1	STAINLESS STEEL	SUS316
30	BALL SEAT	2	STAINLESS STEEL	SUS316+Ni-Cr ALLOY
33	CAP NUT	1S	STAINLESS STEEL	SUS304 (8)
34A	GLAND NUT	1S	STAINLESS STEEL	
34B	NUT	1S	STAINLESS STEEL	
35	CAP BOLT	1S	STAINLESS STEEL	SUS304 (B8)
36	GLAND BOLT	1S	STAINLESS STEEL	
47	THRUST WASHER	1	CARBON	
67	STEM BEARING	1	CARBON	
92	CONNECTOR	1	CARBON STEEL	S45C
93	BRACKET	1	DUCTILE IRON	FCD450-10
99	BOLT	1S	CARBON STEEL	SS400
102	GEAR UNIT	1		
143	SEAT SPRING	1	Ni-Cr-IRON ALLOY	INCONEL X-750
176	SEAT GASKET	1	FLEXIBLE GRAPHITE	
216	PRESSURE	1	STAINLESS STEEL	SUS304
	DIRECTION PLATE			
			1S=1 SET	

STANDARD		
	FACE TO FACE OR END TO END	ASME B16.10 CLASS 300
	END CONNECTION	ASME B16.5 CLASS 300
	WALL THICKNESS	ASME B16.34 CLASS 300
	PRESSURE TEST	API 598
FIGURE		G-300UTB6H

METABALL
CLASS 300 CAST STAINLESS STEEL
BALL VALVES

HIGH TEMPERATURE SERICE. METAL SEAT.
FULL BORE. GEAR TYPE. FLANGED ENDS.

DATE APPD	JUL.21.'09	DRAWING NO	△		
APPD BY	S. SANADA	965-B20025	△		
CHKD BY	Y. ASAKAWA		△		
DSGND BY	S. KAJI		△		
DRAWD BY	Y. NAKAYAMA	REV-11	MARK	DATE	BY

KITZ CORPORATION

KITZ